Index

1. Cover
2. Block Diagram
3. Power Tree
4. Power Supply
5. MIPI CSI & Parallel CSI
6. USB
7. Micro SD & BOOT
8. HDMI & LVDS & CVBS OUT
9. I2S Audio & Line OUT
10. ENET
11. 4G MINI -PCIE
12. MYC Connect
13. Reset & RTC & ADC & PH
14. Mechanical

VERSION HISTORY

Revision	Description	Date	Drawn	Checked	Approved
V01	Initial Edition	2021-06-29			
V02	1. Change power schemes. 2. Add external oscillator to provide Clock for Audio chip SGTL5000. fix and optimize audio circuits. 3. Use twi3 for TP on LVDS1 interface J13, use twi4 for Tp on LVDS2 interface J12. 4. Change pin sequence of J15 5. When use external digital clock to source the YT8511 XT_IN pin , the high level of voltage should not exceed 1.2V. 6. Change reset gpio for 4G 7. Change some gpios pin definition on J25 8. Add a PMIC ON-off Key	2021-12-23			
V10	1. DNP S2, J32 2. Use external oscillator to source 12Mhz to MIPI CSI interface instead of CSI_MCLK from T507 3. DNP Q84, R161 to fix Ethernet1 greed LED always keep brightting even no rj45 cabel is pluged in.				

MYiR http://www.myir-tech.com

Title: Cover

Size:	Document Number:	Rev:
A3	SCH-MYB-YT507-V10	V1.0

Draw By:	Date:	Sheet:
MYIR	Wednesday, March 09, 2022	1 of 14

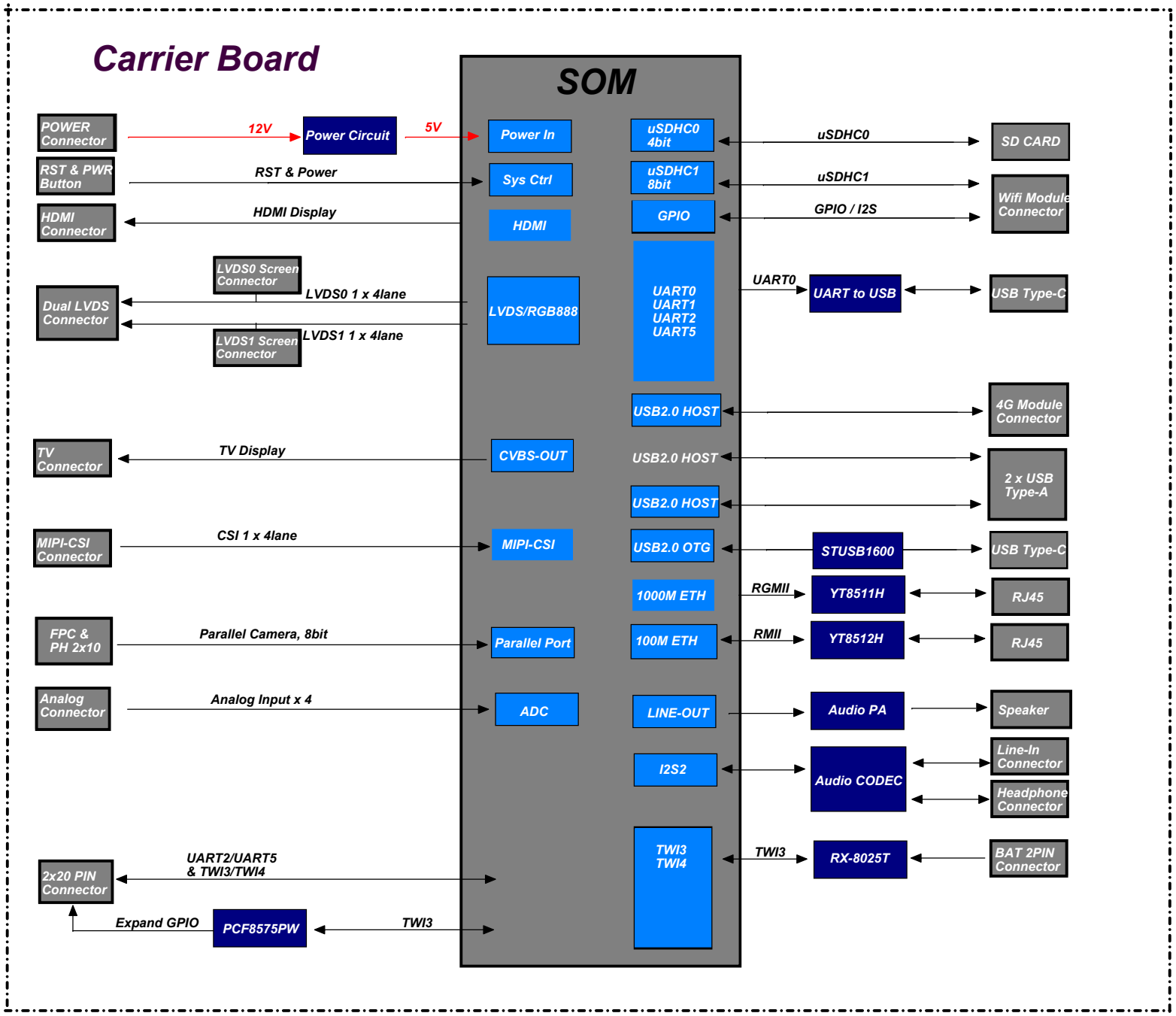

MYiR

http://www.myir-tech.com

Title: Block Diagram

Size:	Document Number:	Rev:
A3	SCH-MYB-YT507-V10	V1.0

Draw By:	Date:	Sheet:
MYIR	Wednesday, March 09, 2022	2 of 14

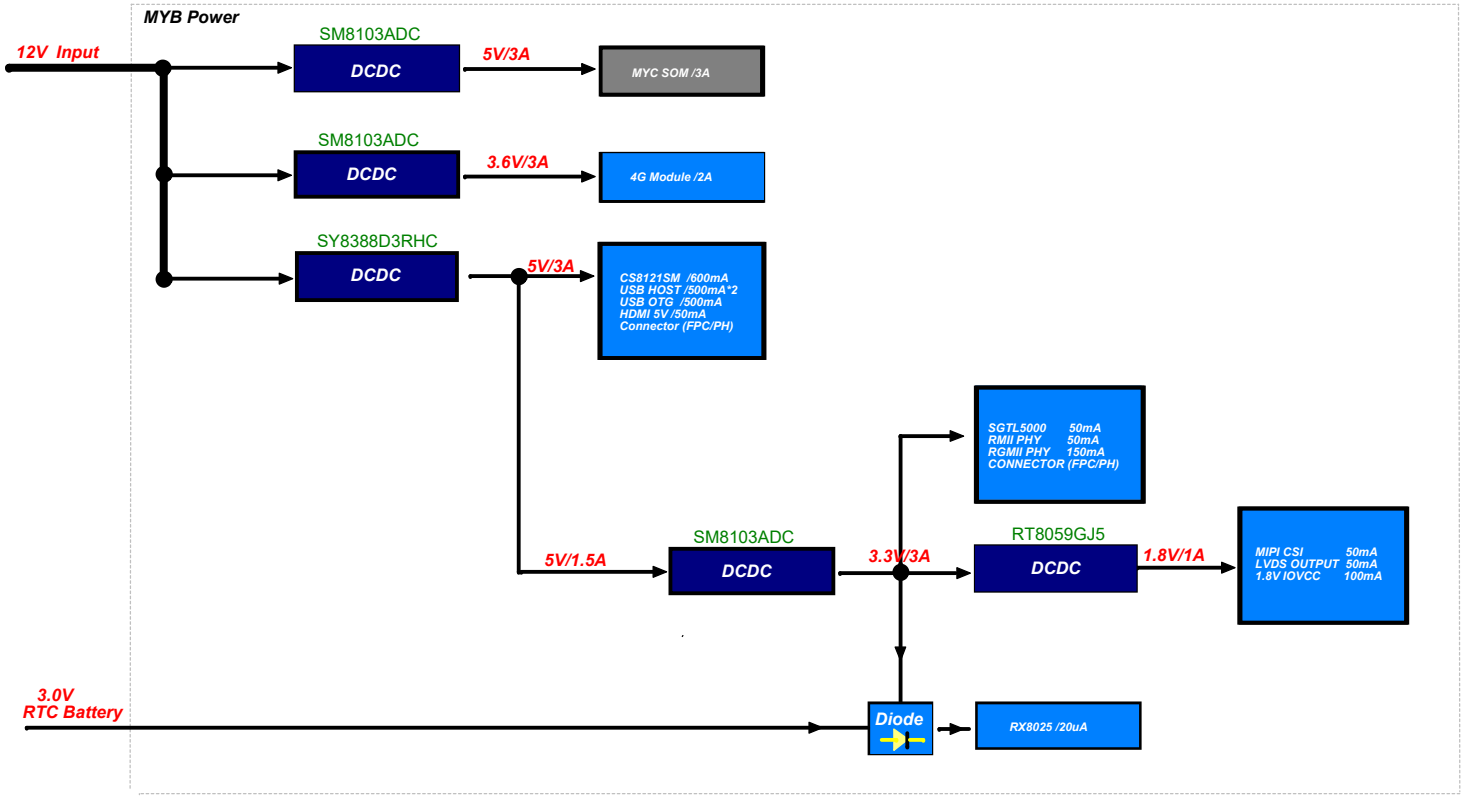

MYiR	http://www.myir-tech.com	
	Title: Power Tree	
Size: A3	Document Number: SCH-MYB-YT507-V10	Rev: V1.0
Draw By: MYIR	Date: Wednesday, March 09, 2022	Sheet: 3 of 14

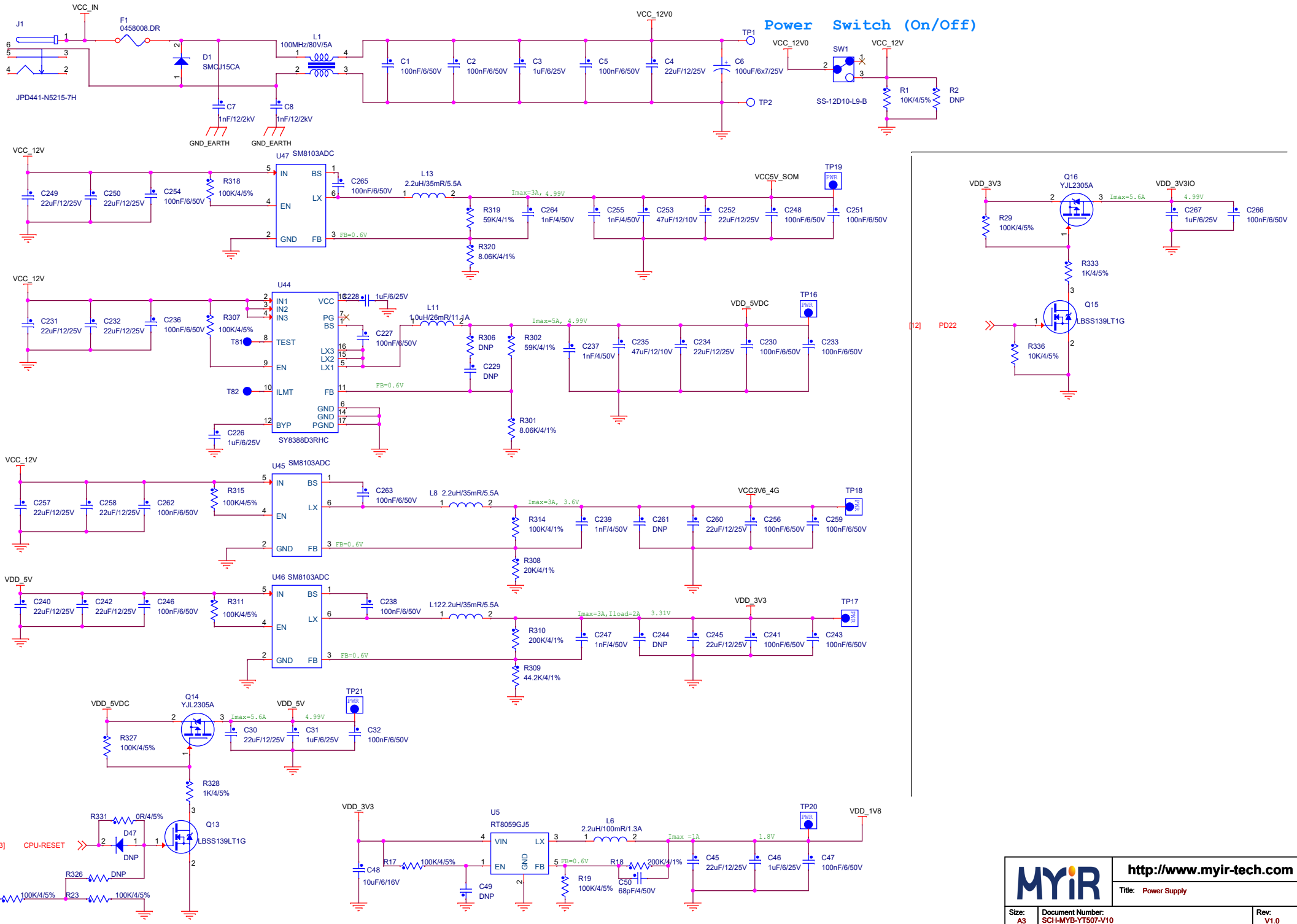
Power Switch (On/Off)
VCC_IN
J1
JPD441-N5215-7H
F1
0458008.DR
D1
SMCJ15CA
L1
100MHz/80V/5A
C1 100nF/6/50V
C2 100nF/6/50V
C3 1uF/6/25V
C5 100nF/6/50V
C4 22uF/12/25V
C6 100uF/6x7/25V
VCC_12V0
TP1
TP2
SW1
SS-12D10-L9-B
VCC_12V
R1 10K/4/5%
R2 DNP
C7 1nF/12/2kV
C8 1nF/12/2kV
GND_EARTH
U47 SM8103ADC
IN
BS
LX
EN
GND
FB
C265 100nF/6/50V
L13 2.2uH/35mR/5.5A
Imax=3A, 4.99V
FB=0.6V
R318 100K/4/5%
R319 59K/4/1%
R320 8.06K/4/1%
C264 1nF/4/50V
C255 1nF/4/50V
C253 47uF/12/10V
C252 22uF/12/25V
C248 100nF/6/50V
C251 100nF/6/50V
VCC5V_SOM
TP19
C249 22uF/12/25V
C250 22uF/12/25V
C254 100nF/6/50V
U44
SY8388D3RHC
IN1
IN2
IN3
TEST
EN
ILMT
BYP
VCC
PG
BS
LX3
LX2
LX1
FB
GND
PGND
C228 1uF/6/25V
L11 1.0uH/26mR/11.1A
Imax=5A, 4.99V
R306 DNP
R302 59K/4/1%
R301 8.06K/4/1%
C229 DNP
C227 100nF/6/50V
C226 1uF/6/25V
R307 100K/4/5%
T81
T82
C231 22uF/12/25V
C232 22uF/12/25V
C236 100nF/6/50V
C237 1nF/4/50V
C235 47uF/12/10V
C234 22uF/12/25V
C230 100nF/6/50V
C233 100nF/6/50V
VDD_5VDC
TP16
U45 SM8103ADC
C263 100nF/6/50V
L8 2.2uH/35mR/5.5A
Imax=3A, 3.6V
R314 100K/4/1%
R308 20K/4/1%
C239 1nF/4/50V
C261 DNP
C260 22uF/12/25V
C256 100nF/6/50V
C259 100nF/6/50V
VCC3V6_4G
TP18
C257 22uF/12/25V
C258 22uF/12/25V
C262 100nF/6/50V
R315 100K/4/5%
U46 SM8103ADC
C238 100nF/6/50V
L122.2uH/35mR/5.5A
Imax=3A,Iload=2A
3.31V
R310 200K/4/1%
R309 44.2K/4/1%
C247 1nF/4/50V
C244 DNP
C245 22uF/12/25V
C241 100nF/6/50V
C243 100nF/6/50V
VDD_3V3
TP17
VDD_5V
C240 22uF/12/25V
C242 22uF/12/25V
C246 100nF/6/50V
R311 100K/4/5%
Q14
YJL2305A
Imax=5.6A
4.99V
C30 22uF/12/25V
C31 1uF/6/25V
C32 100nF/6/50V
TP21
R327 100K/4/5%
R328 1K/4/5%
R331 0R/4/5%
D47
DNP
Q13
LBSS139LT1G
[12,13] CPU-RESET
VSOM-3V3
R22 100K/4/5%
R23 100K/4/5%
R326 DNP
U5
RT8059GJ5
VIN
LX
EN
GND
FB
L6 2.2uH/100mR/1.3A
Imax =1A
1.8V
R17 100K/4/5%
R18 200K/4/1%
R19 100K/4/5%
C48 10uF/6/16V
C49 DNP
C50 68pF/4/50V
C45 22uF/12/25V
C46 1uF/6/25V
C47 100nF/6/50V
TP20
VDD_1V8
Q16
YJL2305A
Imax=5.6A
4.99V
VDD_3V3IO
R29 100K/4/5%
R333 1K/4/5%
R336 10K/4/5%
Q15
LBSS139LT1G
C267 1uF/6/25V
C266 100nF/6/50V
[12] PD22
MYiR
http://www.myir-tech.com
Title: Power Supply
Size: A3
Document Number: SCH-MYB-YT507-V10
Rev: V1.0
Draw By: MYIR
Date: Wednesday, March 09, 2022
Sheet: 4 of 14

MIPI CSI

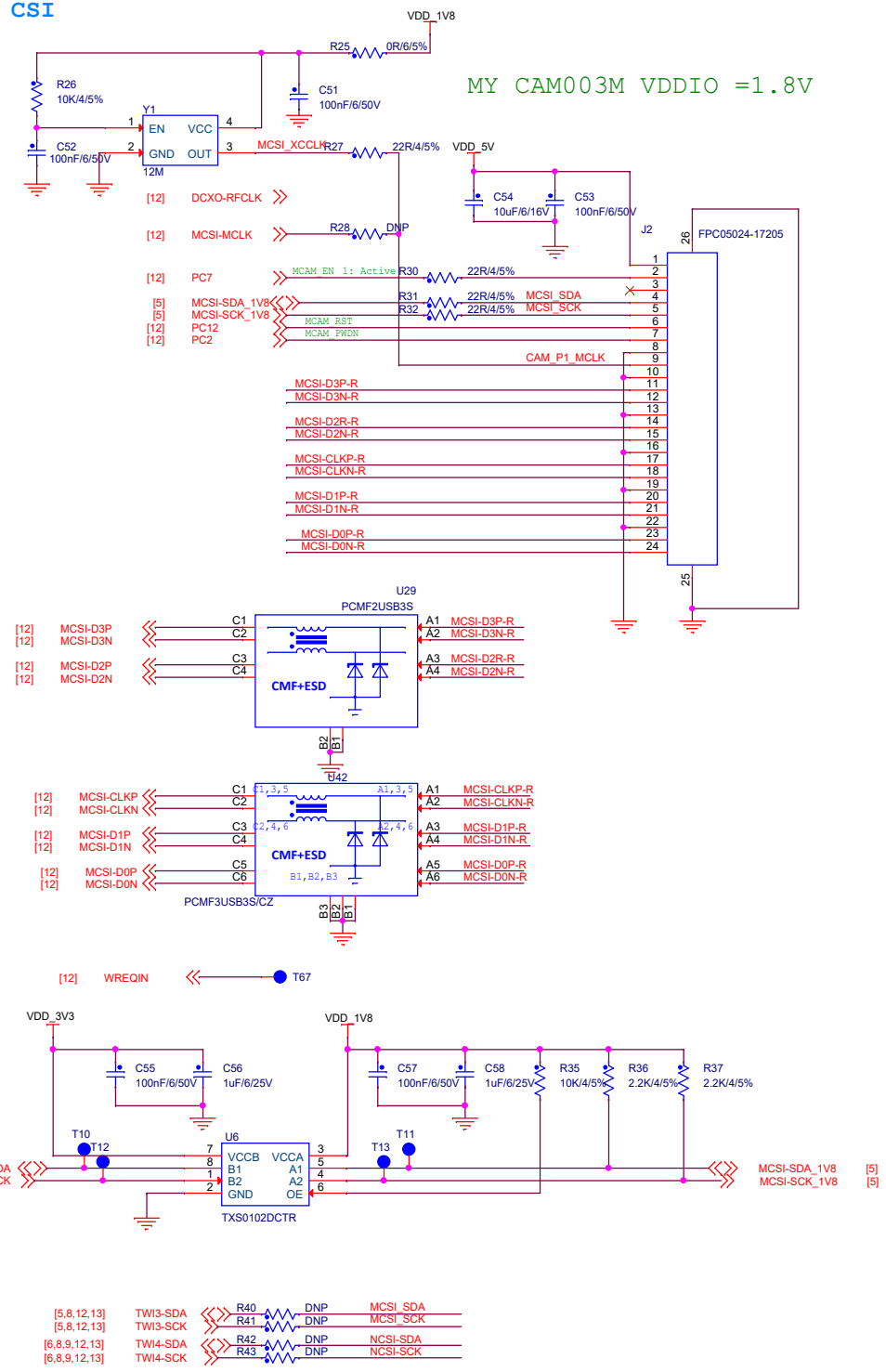

Parallel CSI

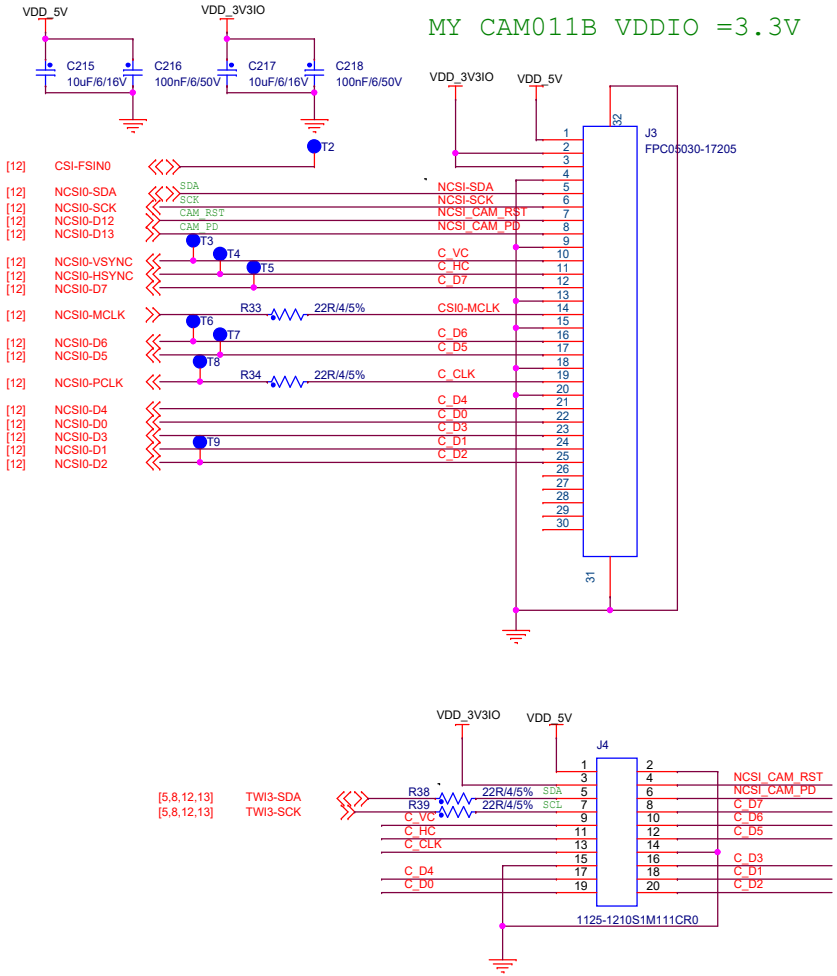

MYiR	http://www.myir-tech.com		
	Title: CSI		
Size: A3	Document Number: SCH-MYB-YT507-V10		Rev: V1.0
Draw By: MYIR	Date: Wednesday, March 09, 2022		Sheet: 5 of 14

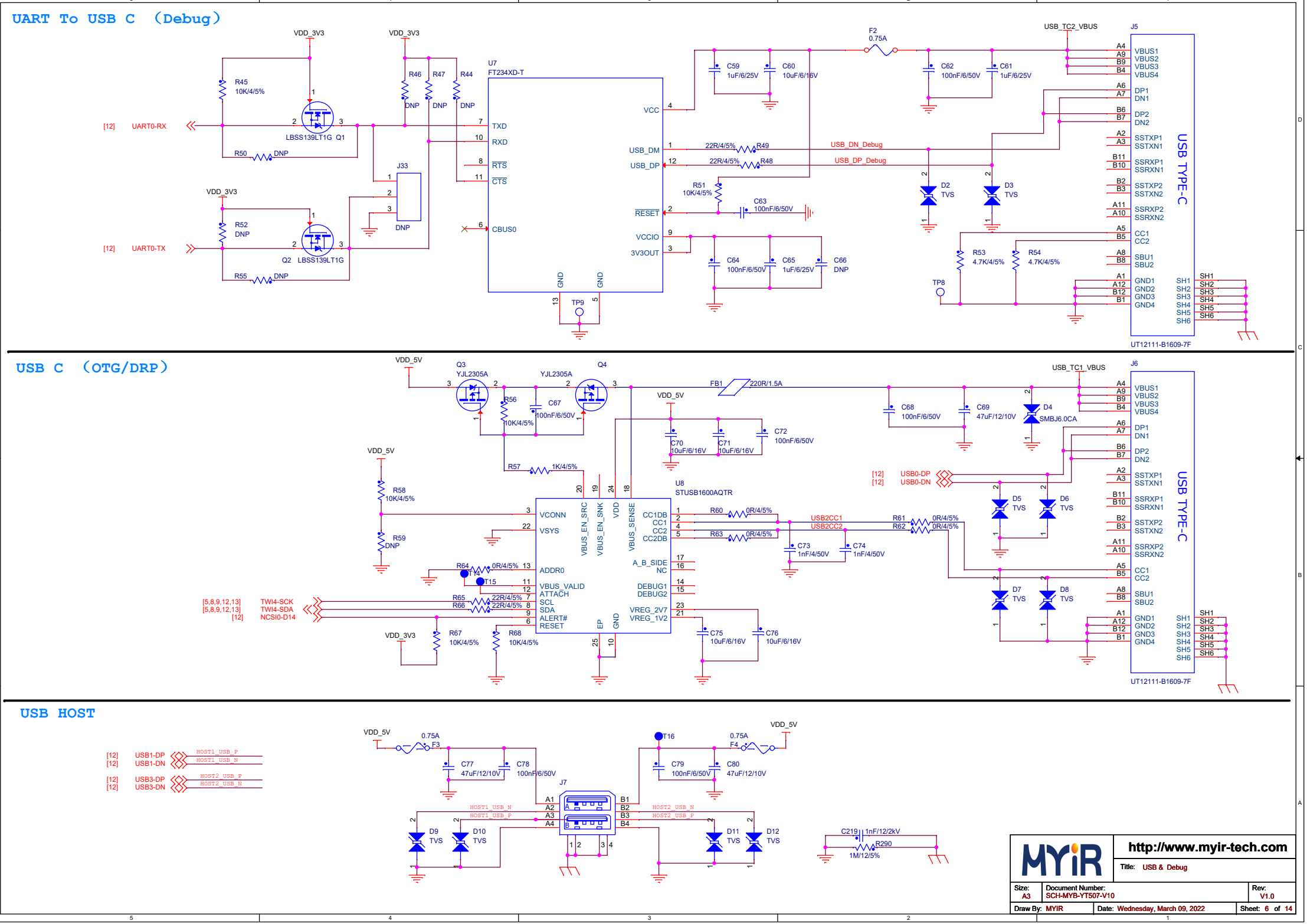
UART To USB C (Debug)
USB C (OTG/DRP)
USB HOST
U7
FT234XD-T
U8
STUSB1600AQTR
J5
J6
J7
USB TYPE-C
UT12111-B1609-7F
LBSS139LT1G Q1
Q2 LBSS139LT1G
YJL2305A
SMBJ6.0CA
USB_TC2_VBUS
USB_TC1_VBUS
USB_DN_Debug
USB_DP_Debug
[12] UART0-RX
[12] UART0-TX
[12] USB0-DP
[12] USB0-DN
[5,8,9,12,13] TWI4-SCK
[5,8,9,12,13] TWI4-SDA
[12] NCSI0-D14
[12] USB1-DP
[12] USB1-DN
[12] USB3-DP
[12] USB3-DN
HOST1_USB_P
HOST1_USB_N
HOST2_USB_P
HOST2_USB_N
http://www.myir-tech.com
Title: USB & Debug
Size: A3
Document Number: SCH-MYB-YT507-V10
Rev: V1.0
Draw By: MYIR
Date: Wednesday, March 09, 2022
Sheet: 6 of 14

Micro SD

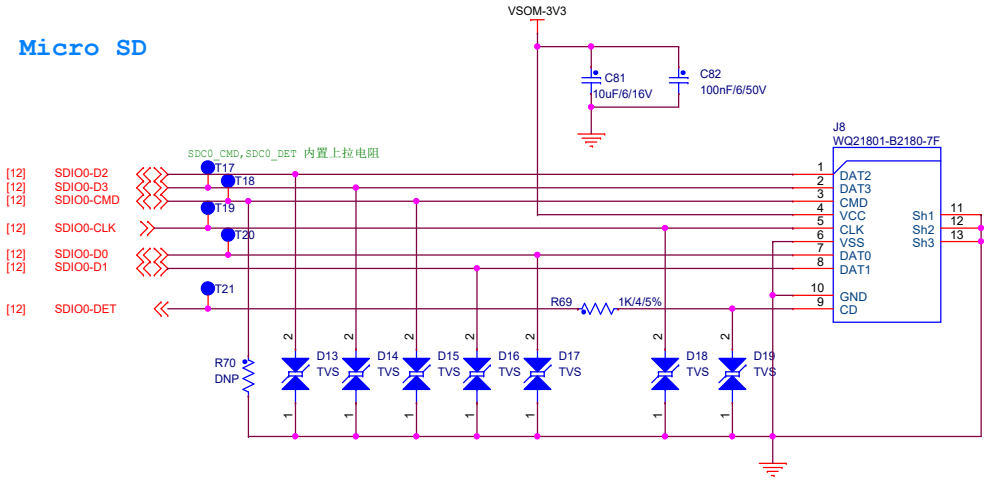

BOOT SEL

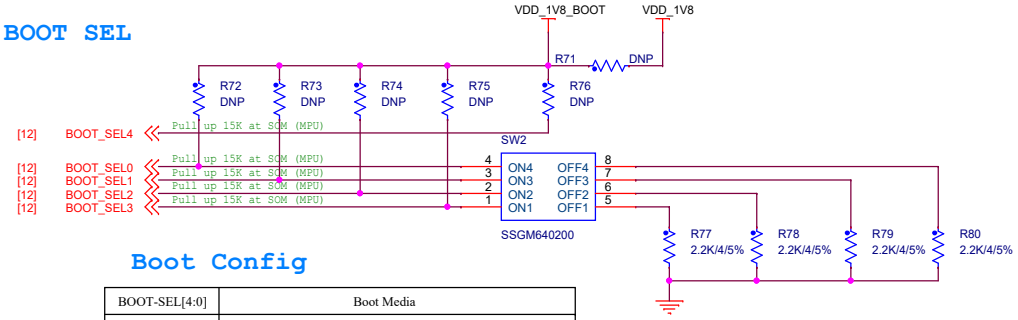

Boot Config

BOOT-SEL[4:0]	Boot Media
11011	SMHC0 -> EMMC_Boot -> eMMC_User
11101	SMHC0 -> eMMC_User -> EMMC_Boot
11110	SMHC0 -> SLC Nand
11111	SMHC0 -> MLC Nand

MYiR	http://www.myir-tech.com	
	Title: Micro SD & Boot	
Size: A3	Document Number: SCH-MYB-YT507-V10	Rev: V1.0
Draw By: MYIR	Date: Wednesday, March 09, 2022	Sheet: 7 of 14

HDMI Display

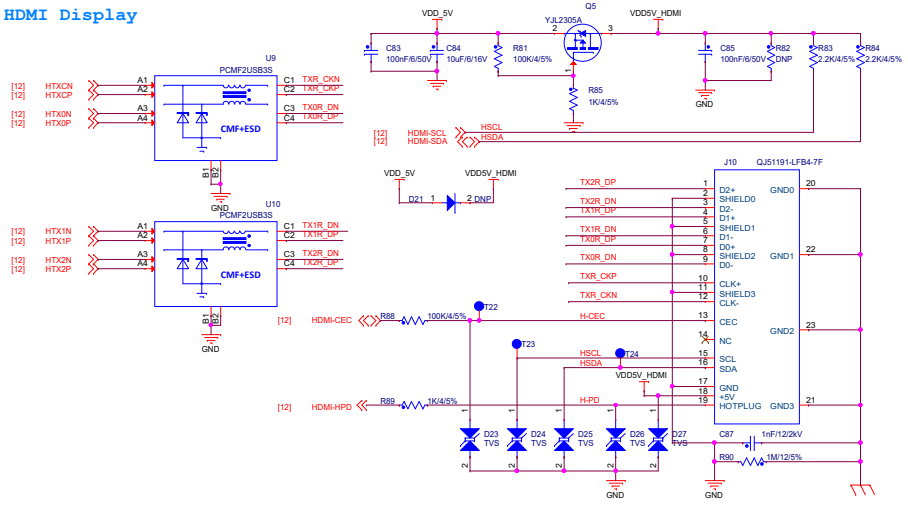

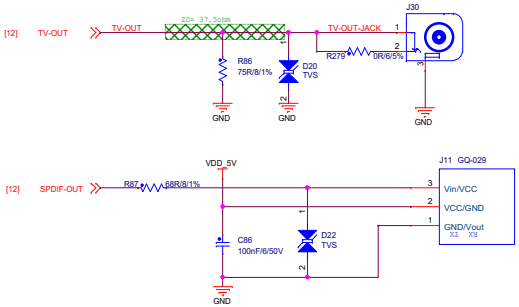

LVDS0

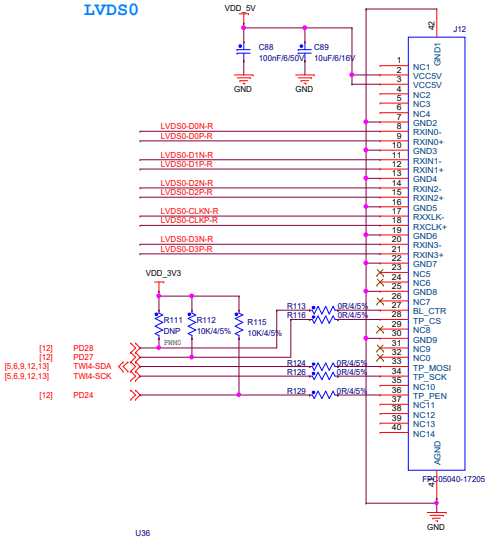

LVDS1

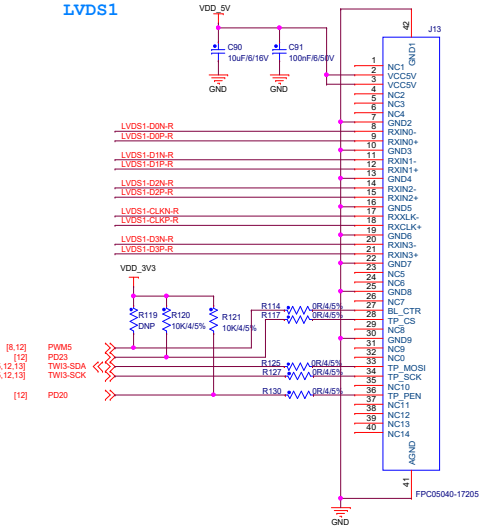

LVDS0+LVDS1

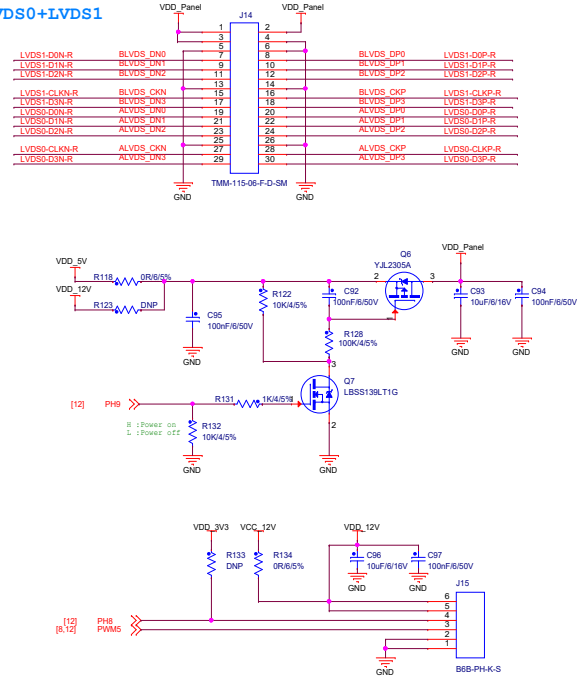

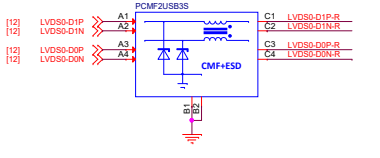

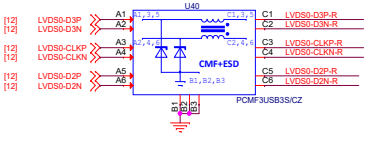

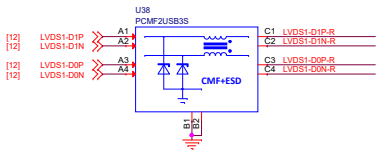

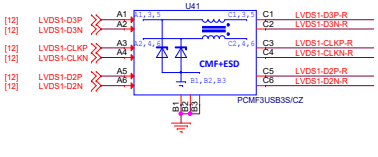

MYiR	http://www.myir-tech.com		
	Title: Dispaly		
Size: A2	Document Number: SCH-MYB-YT507-V10		Rev: V1.0
Draw By: MYIR	Date: Wednesday, March 09, 2022		Sheet: 8 of 14

Audio I2S

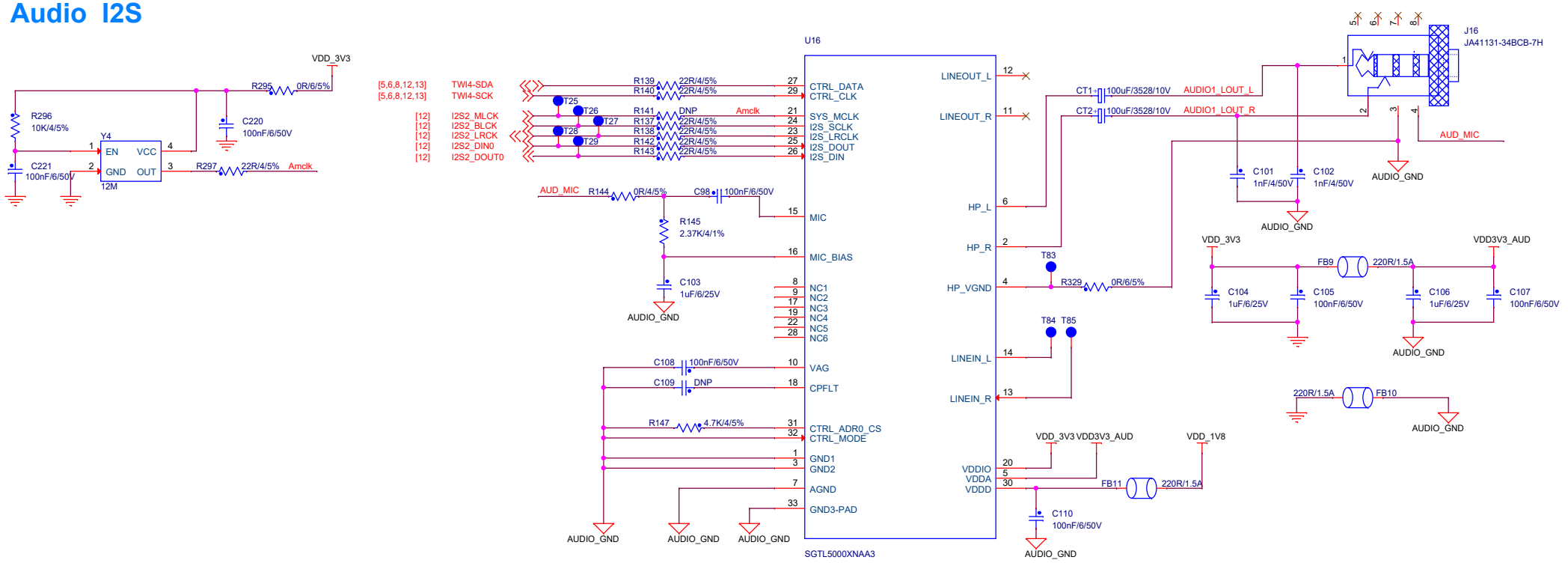

Audio amplify

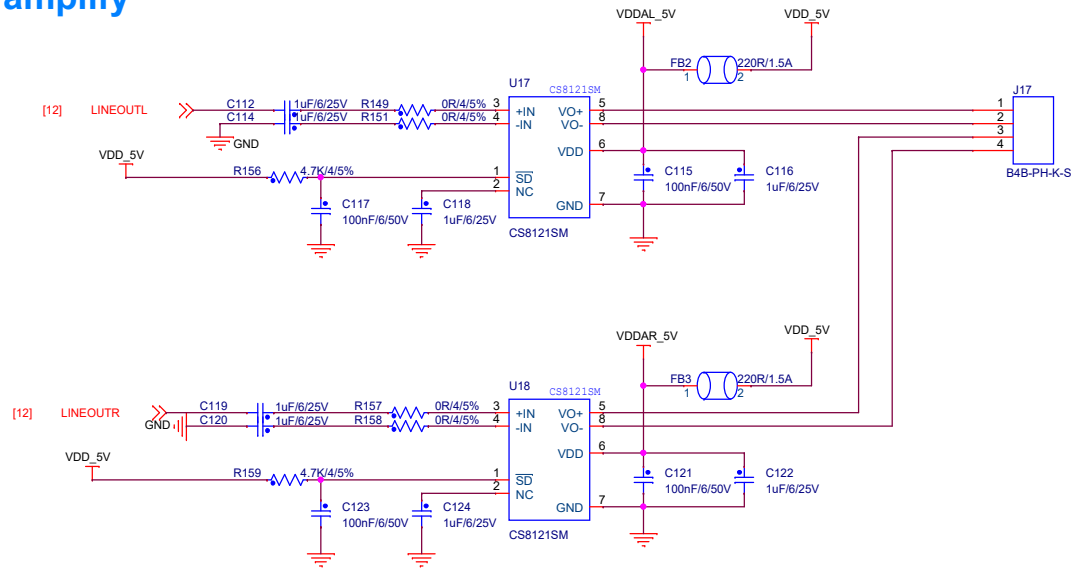

Line in

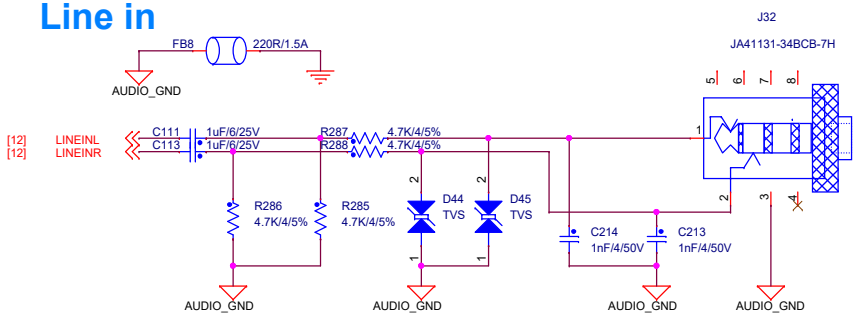

MYiR	http://www.myir-tech.com	
	Title: Audio	
Size: A3	Document Number: SCH-MYB-YT507-V10	Rev: V1.0
Draw By: MYIR	Date: Wednesday, March 09, 2022	Sheet: 9 of 14

RGMII PHY

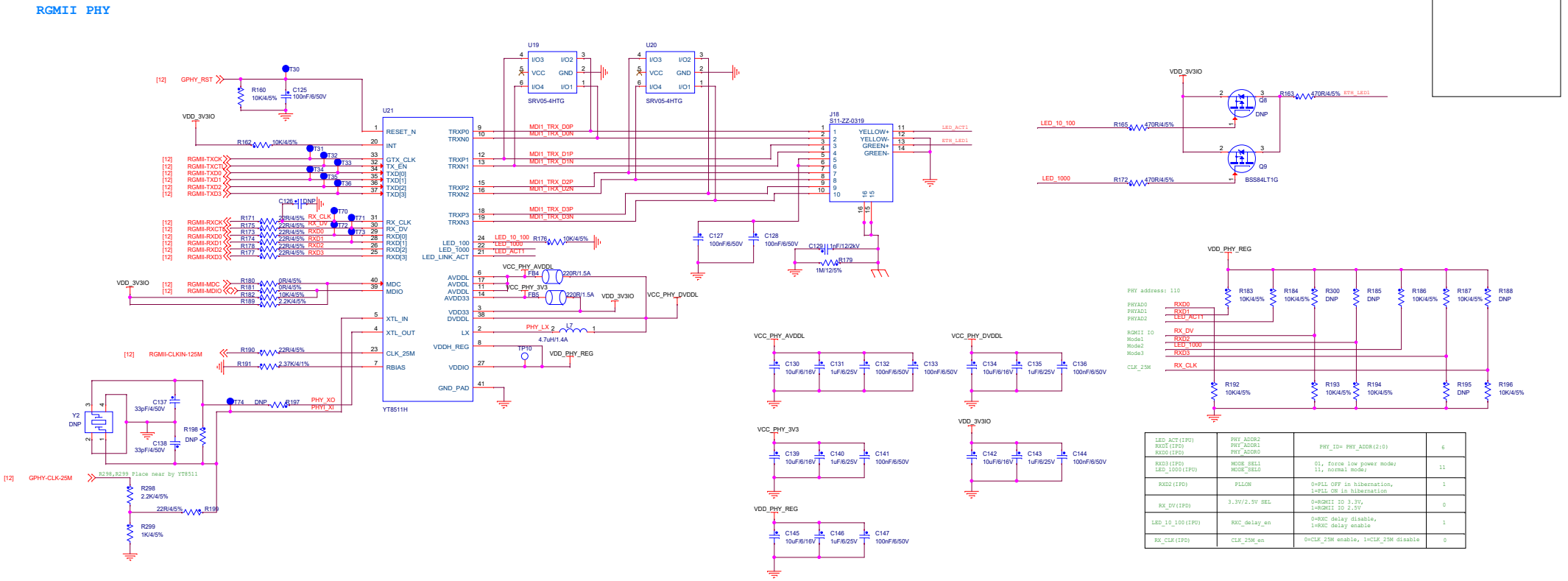

LED_ACT(IPU) RXD1(IPD) RXD0(IPD)	PHY_ADDR2 PHY_ADDR1 PHY_ADDR0	PHY_ID= PHY_ADDR(2:0)	6
RXD3(IPD) LED_1000(IPU)	MODE_SEL1 MODE_SEL0	01, force low power mode; 11, normal mode;	11
RXD2(IPD)	PLLON	0=PLL OFF in hibernation, 1=PLL ON in hibernation	1
RX_DV(IPD)	3.3V/2.5V SEL	0=RGMII IO 3.3V, 1=RGMII IO 2.5V	0
LED_10_100(IPU)	RXC_delay_en	0=RXC delay disable, 1=RXC delay enable	1
RX_CLK(IPD)	CLK_25M_en	0=CLK_25M enable, 1=CLK_25M disable	0

RMII PHY

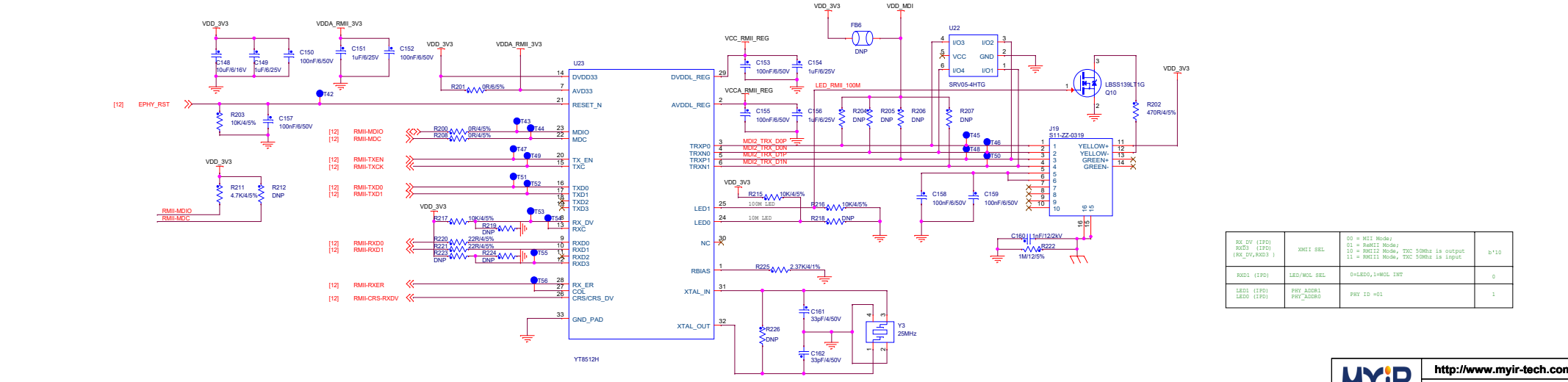

RX_DV (IPD) RXD3 (IPD) (RX_DV,RXD3)	XMII SEL	00 = MII Mode; 01 = RsMII Mode; 10 = RMII2 Mode, TXC 50Mhz is output 11 = RMII1 Mode, TXC 50Mhz is input	b'10
RXD1 (IPD)	LED/MOL SEL	0=LED0,1=MOL INT	0
LED1 (IPD) LED0 (IPD)	PHY_ADDR1 PHY_ADDR0	PHY ID =01	1

MYiR http://www.myir-tech.com

Title: ENET

Size:	Document Number:	Rev:
A2	SCH-MYB-YT507-V10	V1.0

Draw By: MYIR | Date: Wednesday, March 09, 2022 | Sheet: 10 of 14

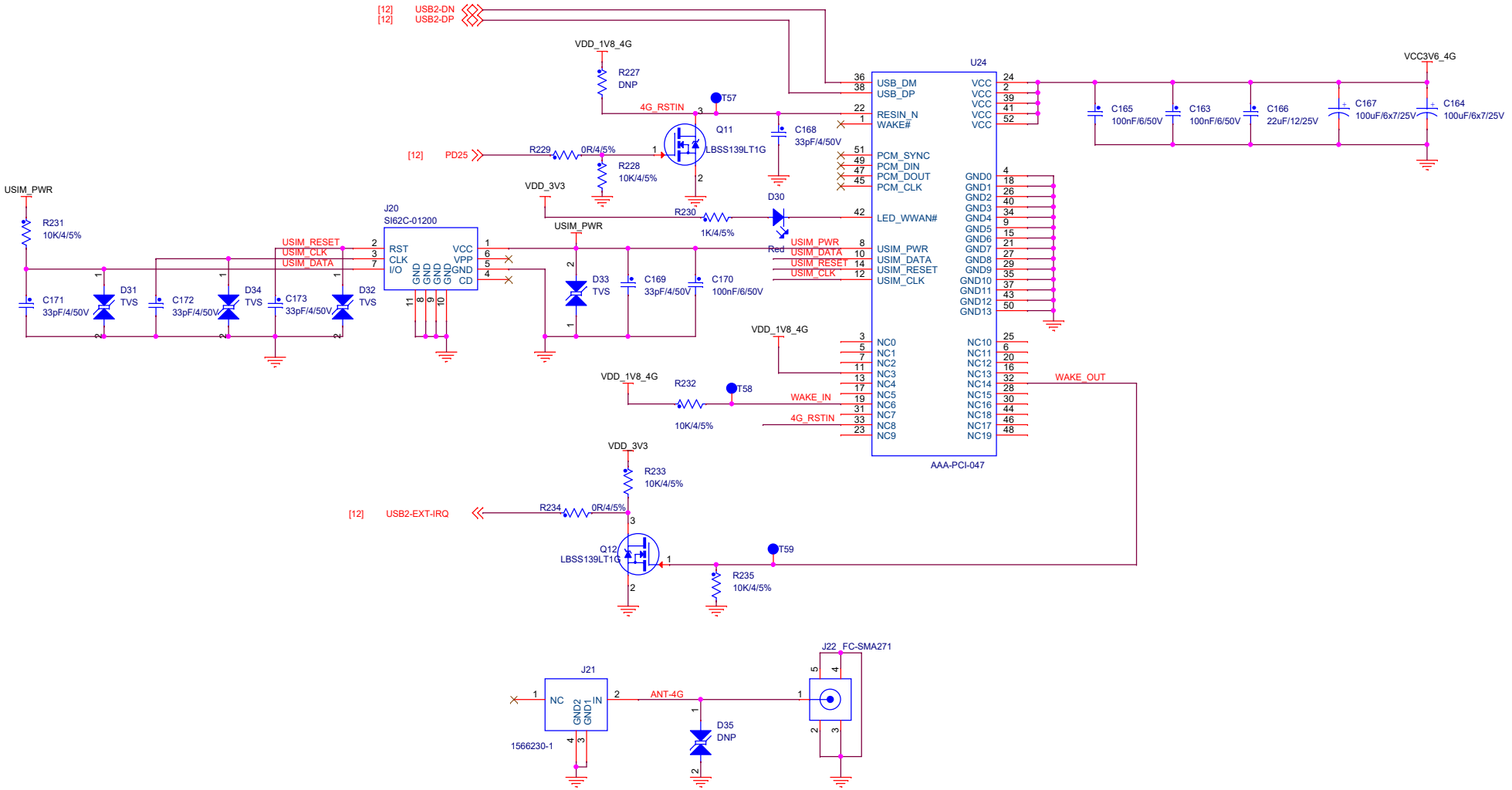

MYiR	http://www.myir-tech.com	
	Title: 4G	
Size: A3	Document Number: SCH-MYB-YT507-V10	Rev: V1.0
Draw By: MYIR	Date: Wednesday, March 09, 2022	Sheet: 11 of 14

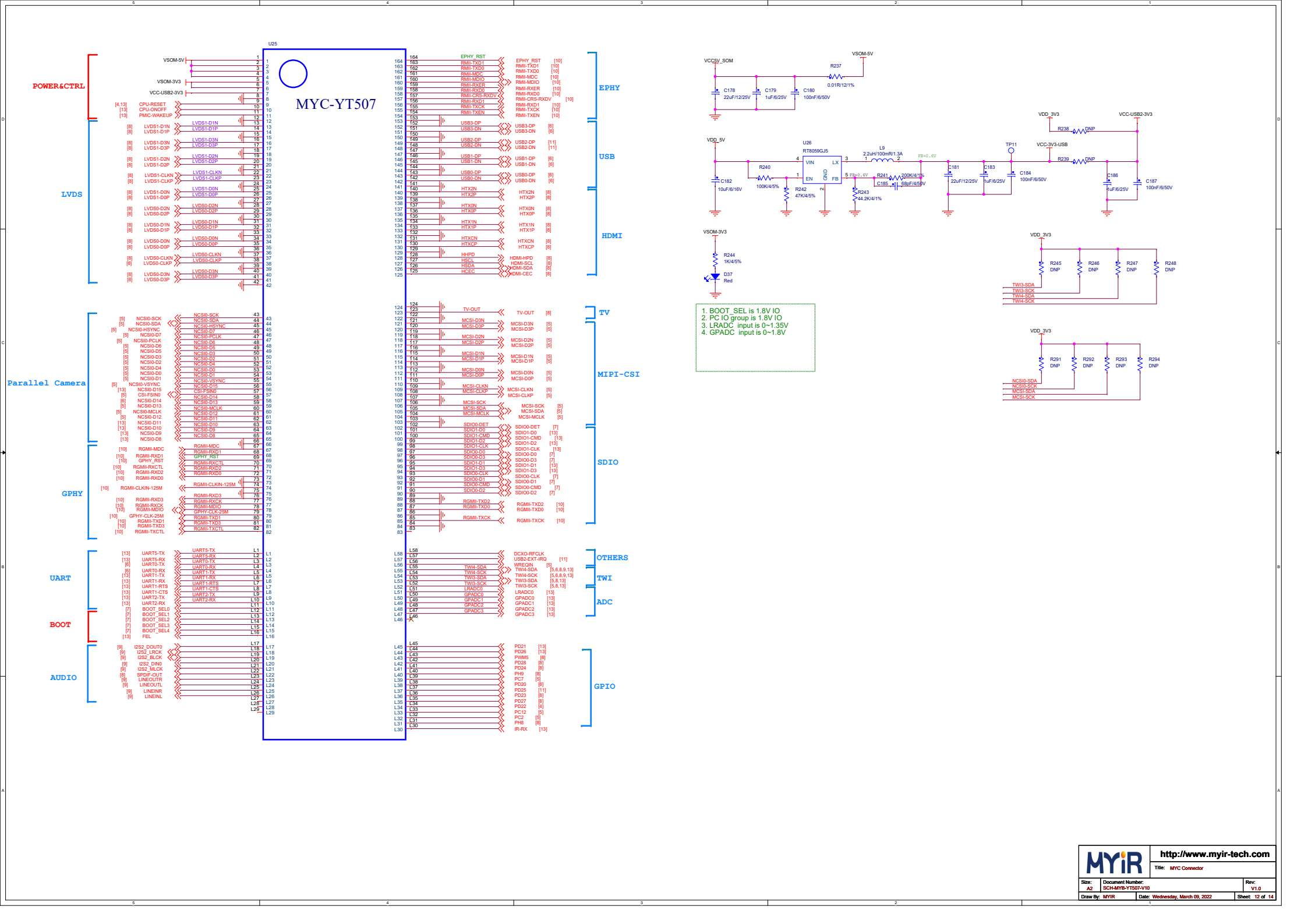

MYiR

http://www.myir-tech.com

Title: MYC Connector

Size: A2	Document Number: SCH-MYB-YT507-V10	Rev: V1.0
Draw By: MYIR	Date: Wednesday, March 09, 2022	Sheet: 12 of 14

Reserve

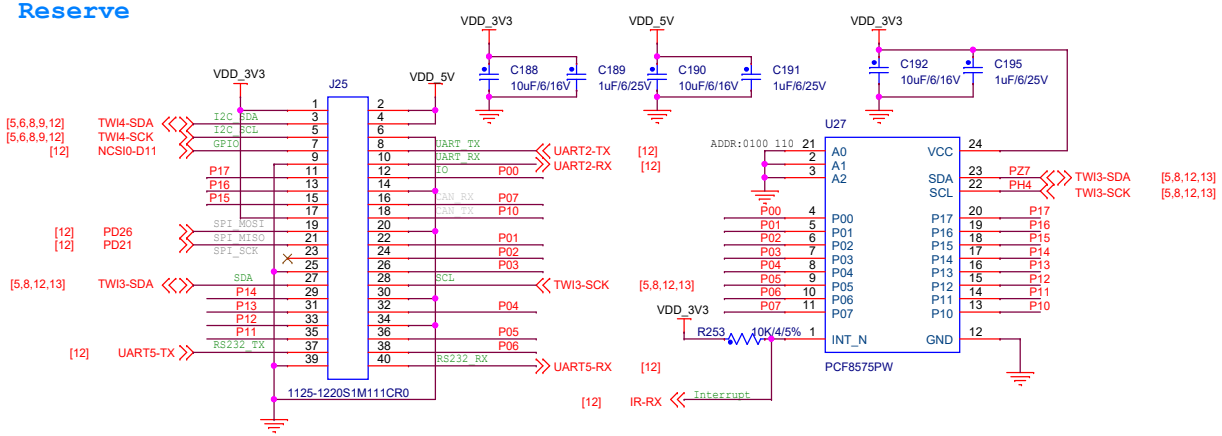

SDIO & UART

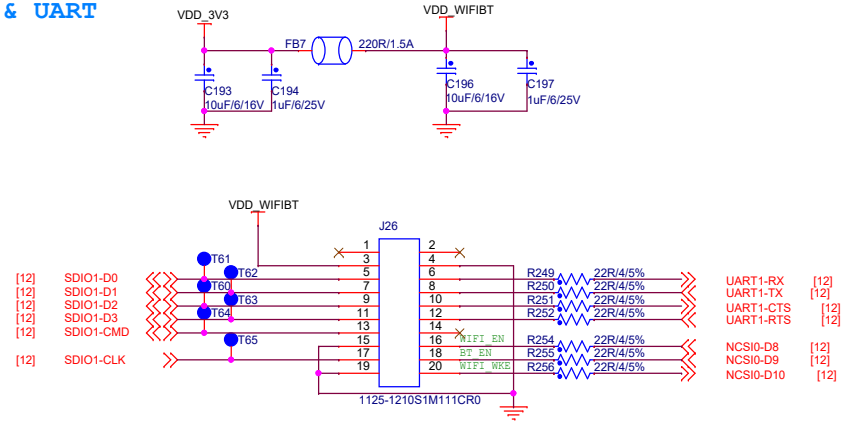

RTC

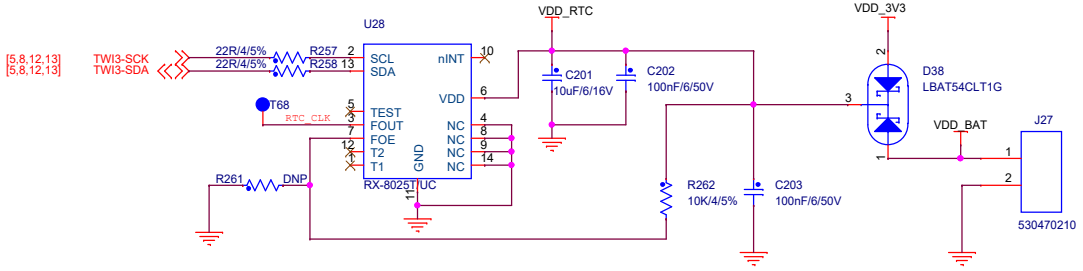

LED

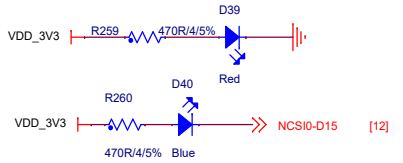

GPADC

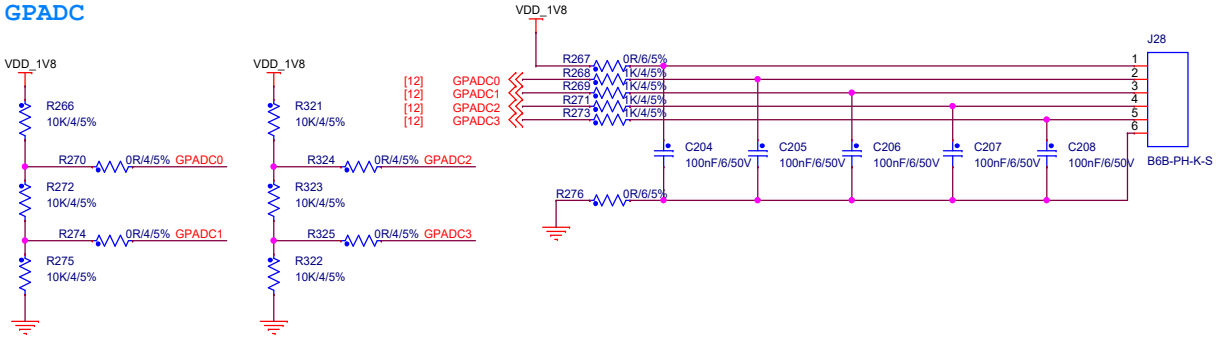

LRADC

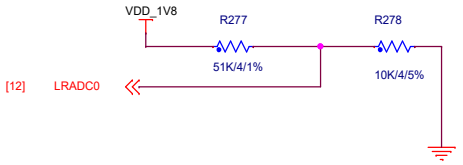

Reset Key

WakeUp Key

ONOFF KEY

FEL Key

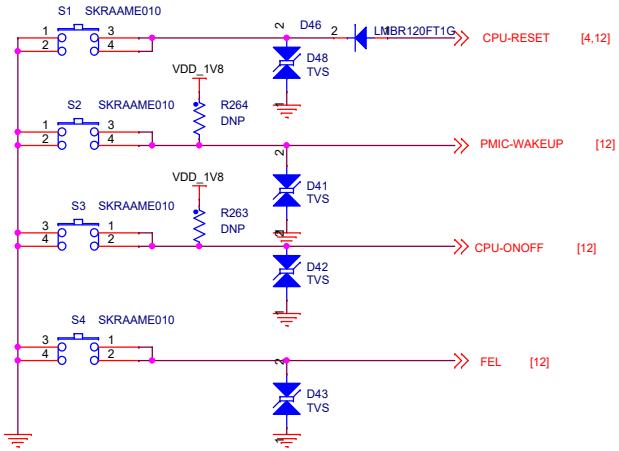

MYiR http://www.myir-tech.com

Title: MISC		
Size: A3	Document Number: SCH-MYB-YT507-V10	Rev: V1.0
Draw By: MYIR	Date: Wednesday, March 09, 2022	Sheet: 13 of 14

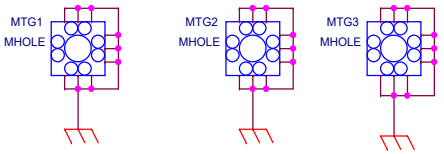

Board Mechanical Hole

Mark Point

Mechanical Hole for Mounting RaspberryPi Board

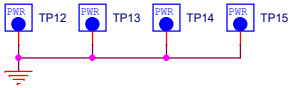

GND Test Point

Mechanical Hole for Mounting 4G Module

MYIR PCB Template

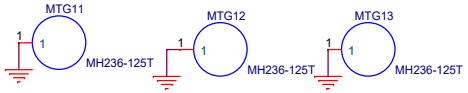

MYiR	http://www.myir-tech.com	
	Title: Mechanical	
Size: A3	Document Number: SCH-MYB-YT507-V10	Rev: V1.0
Draw By: MYIR	Date: Wednesday, March 09, 2022	Sheet: 14 of 14